ATTACHMENT 2B*

PROPOSED WELL DESIGN (INCLUDED ON THUMB DRIVE)

Texas Custodial Trust

2301 West Paisano Drive • El Paso, Texas 79922-1622

East Property Groundwater Hydraulic Barrier Design

April 2015

Prepared for Project Navigator, LTD (Trustee) By:

Malcolm Pirnie, Inc.

401 East Main Street
Suite 400
El Paso, Texas 79901
915-533-9025

6835001

MALCOLM PIRNIE

Table of Contents

1. Electrical Drawings

Electrical Legend and One Line Diagram
Electrical Details
Electrical Site Plan

2. GBH Wellhead Sketch

GBH Wellhead Sketch - Profile View
GBH Wellhead Sketch - Plan View

3. GHB Pumping Well EP-163

Well Construction and Pump Installation

4. Tank Schematics

5. GHB Pipeline Civil Drawings

GHB Pipeline
Civil Details and Flow DiagramSoil Boring Results

ELECTRICAL SYMBOLS

(2) — FUSE–VOLTAGE AS REQUIRED, TYPE AND RATING AS SHOWN OR AS REQUIRED. NUMBER IN PARENTHESES INDICATES QUANTITY

600/5 (3) — CURRENT TRANSFORMER & RATING NUMBER IN PARENTHESIS INDICATES QUANTITY

480/120V(3) — POTENTIAL TRANSFORMER WITH PRIMARY AND SECONDARY FUSES. NUMBER IN PARENTHESIS INDICATES QUANTITY.

SPD — SURGE PROTECTION DEVICE

600/5 (3), POWER MONITOR, 480V/120V (3) — MICROPROCESSOR BASED METERING DEVICE

DELTA–WYE GROUNDED POWER TRANSFORMER WITH GROUNDED SECONDARY

LA — LIGHTNING ARRESTOR WITH GROUND

M — MOTOR CONTACTOR

CR1 — CONTROL RELAY (NUMBER IDENTIFIES RELAY)

TR1 — TIMING RELAY (NUMBER IDENTIFIES RELAY)

M — MOTOR RELAY CONTACTS

CR1 — NORMALLY OPEN CONTACT (SHELF POSITION) NUMBER IDENTIFIES RELAY

GROUND ROD IN GROUND WELL

GROUND ROD

OR — GROUND GRID CABLE CONNECTION, EXOTHERMIC WELD

MOMENTARY CONTACT PUSHBUTTON, NORMALLY OPEN

STOP — PUSH–PULL, MAINTAINED STOP PUSHBUTTON WITH LOCKING PROVISIONS AND MUSHROOM HEAD

H O A, XOO, OXO, OOX — HAND–OFF–AUTOMATIC, 3 POSITION MAINTAINED CONTACT SWITCH OR AS NOTED. 'X' INDICATES CONTACT CLOSED.

OX — SINGLE POLE MAINTAINED CONTACT ON–OFF SWITCH 'X' INDICATES CONTACT CLOSED.

INTERNAL WIRING
EXTERNAL WIRING
TERMINATION POINT FOR EXTERNAL WIRING CONNECTIONS.

AT / AF — THERMAL–MAGNETIC MOLDED CASE CKT BREAKER, TOP NUMBER INDICATES FRAME RATING; LOWER NUMBER INDICATES TRIP RATING; TYPICAL FOR OTHER TYPES OF BREAKERS. BREAKER TO BE 3 POLE UNO AS "2P" OR "1P" FOR 2 POLE OR 1 POLE RESPECTIVELY.

CR1 — NORMALLY CLOSED CONTACT (SHELF POSITION) NUMBER IDENTIFIES RELAY

ELECTRICAL ABBREVIATIONS

A	AMPERES
AC	ALTERNATING CURRENT
AFC	ABOVE FINISHED CONCRETE
AFF	ABOVE FINISHED FLOOR
AFG	ABOVE FINISHED GRADE
AIC	AMPERE INTERRUPTING CAPACITY
AUX	AUXILIARY
AUTO	AUTOMATIC
AWG	AMERICAN WIRE GAUGE
BKR	BREAKER
BLDG	BUILDING
C	CONDUIT
CB	CIRCUIT BREAKER
CKT	CIRCUIT
CO	CONDUIT ONLY
COND	CONDUCTOR(S)
CNTL	CONTROL
CONT	CONTINUED
CPT	CONTROL POWER TRANSFORMER
CT	CURRENT TRANSFER
CU	COPPER
DC	DIRECT CURRENT
DISC	DISCONNECT
DISC SW	DISCONNECT SWITCH
DWG	DRAWING
EHH	ELECTRICAL HANDHOLE
EMH	ELECTRICAL MANHOLE
EXIST	EXISTING
FDR	FEEDER
FE	FLOW ELEMENT
FIT	FLOW INDICATING TRANSMITTER
FLEX	FLEXIBLE
FS	FLOW SWITCH
FT	FEET OR FOOT
FUT	FUTURE
GALV	GALVANIZED
GFI	GROUND FAULT INTERRUPTOR
GND	GROUND
HDG	HOT DIPPED GALVANIZED
HH–1	HANDHOLE, AS NUMBERED
HOA	HAND/OFF/AUTO
HTR	HEATER
HZ	HERTZ
IC	INTERRUPTING CURRENT
IHH	INSTRUMENTATION HANDHOLE
IMH	INSTRUMENTATION MANHOLE
IN OR "	INCHES OR INCH
JB OR J	JUNCTION BOX, CONDULET, FITTING AS REQUIRED BY NEC, UNLESS NOTED OTHERWISE
KAIC	THOUSAND AMPERE INTERRUPTING CAPACITY (SYMMETRICAL)
KVA	KILOVOLT AMPERES
KW	KILOWATTS
KW–HR	KILOWATT HOURS
KWHM	KILOWATT HOUR METER
KWM	KILOWATT METER
LCP	LOCAL CONTROL PANEL
LEV	LEVEL
LS	LEVEL SWITCH
LT	LIGHT
LV	LOW VOLTAGE
MCM or KCMIL	THOUSAND CIRCULAR MILS
MCP	MOTOR CIRCUIT PROTECTOR
MFR	MANUFACTURER
MH–1	MANHOLE, NUMBER AS NOTED
MIN	MINIMUM
MOV	MOTOR OPERATED VALVE OR GATE
MTR	MOTOR
NEC	NATIONAL ELECTRICAL CODE
NNU	NUMBER NOT USED
NO. or #	NUMBER
NTS	NOT TO SCALE
OIT	OPERATOR INTERFACE TERMINAL
OL	OVERLOAD RELAY
P	POWER CONDUIT
PB	PULLBOX
PLC	PROGRAMMABLE LOGIC CONTROLER
PNL	PANEL
PS	PRESSURE SWITCH
PT	POTENTIAL TRANSFORMER
PTT	PUSH TO TEST
REQ	REQUIRED
PVC	POLYVINYL CHLORIDE
RGS	RIGID GALVANIZED STEEL CONDUIT
SPEC	SPECIFICATION
SS	STAINLESS STEEL, SAFETY SHOWER
S/S	STOP/START STATION
STL	STEEL
STP	SHIELDED TWISTED PAIR
STR	STARTER
STT	SHIELDED TWISTED TRIAD
SV	SOLENOID VALVE
SW	SWITCH
T	TRANSFORMER
TB	TERMINAL BOX
TEMP	TEMPERATURE
TS	TEMPERATURE SWITCH
TWSH	TWISTED SHIELDED
TYP	TYPICAL
V	VOLTS
VAC	VOLTS ALTERNATING CURRENT
W	WATTS
WM	WATTMETER
WP	WEATHERPROOF
XFMR	TRANSFORMER
XS	LIMIT SWITCH
3ø OR 3PH	3 PHASE
3W	THREE WIRE
4W	FOUR WIRE

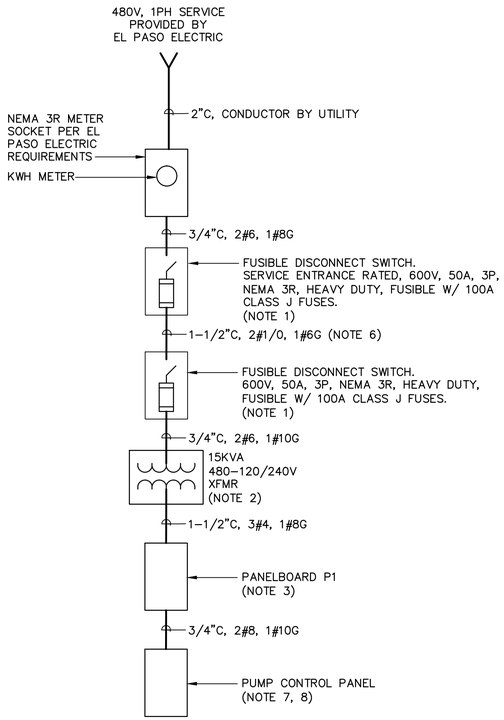

ONE-LINE DIAGRAM

NOTES:

1. EXTEND #4 TINNED BARE COPPER GROUND WIRE FROM GROUND GRID UP THROUGH CONDUIT TO FUSIBLE DISCONNECT SWITCH. TERMINATE GROUND WIRE AT THE DISCONNECT SWITCH NEUTRAL AND BOND TO THE ENCLOSURE.
2. 15KVA, 480–120/240V TRANSFORMER, NEMA 3R ENCLOSURE. TRANSFORMER SHALL BE DRY–TYPE, AIR–COOLED, LISTED AS ENERGY EFFICIENT WITH 220 DEGREE C INSULATION CLASS AND 150 DEGREE C TEMPERATURE RISE. MANUFACTURED BY EATON, SCHNEIDER ELECTRIC, OR EQUAL.
3. 100A, 120/240V, 1PH, 3W, 10KAIC, NEMA 3R PANELBOARD. PROVIDE PANELBOARD WITH A 70A MAIN CIRCUIT BREAKER, ONE 40A, 2P CIRCUIT BREAKER TO FEED THE PUMP CONTROL PANEL, ONE 40A, 2P SPARE CIRCUIT BREAKER, AND FOUR 20A, 1P SPARE CIRCUIT BREAKERS. PANELBOARD SHALL BE PROVIDED WITH COPPER BUS AND ALL BREAKERS SHALL HAVE A 10KAIC RATING AND BE THERMAL MAGNETIC TYPE. MANUFACTURED BY EATON, SCHNEIDER ELECTRIC, OR EQUAL.
4. PROVIDE DISCONNECT SWITCH, TRANSFORMER, PANELBOARD, AND PUMP CONTROL PANEL ATTACHED TO A 1/4" ALUMINUM PLATE MOUNTED VIA CHANNEL SUPPORTS. UTILIZE STAINLESS STEEL HARDWARE.
5. ALL EXPOSED CONDUIT SHALL BE GALVANIZED RIGID STEEL. CONDUIT ROUTED UNDERGROUND SHALL BE SCHEDULE 40 PVC CONDUIT, UNLESS OTHERWISE NOTED.
6. FEEDER IS APPROXIMATELY 1900 FEET IN LENGTH. PROVIDE SCHEDULE 80 PVC CONDUIT FOR THIS CONDUIT RUN WHERE NOT CONCRETE ENCASED. PROVIDE ELECTRICAL PULL BOXES, FLUSH WITH GRADE, EVERY 300 FEET TO PROVIDE PULLING/ACCESS POINTS. CONDUIT TRANSITIONS TO CONCRETE ENCASED DUCT BANK WHEN ROUTED ALONGSIDE PUMP CONTROL PANEL FEEDER CONDUIT. REFER TO ELECTRICAL DETAILS FOR MORE INFORMATION.
7. PUMP CONTROL PANEL SHALL BE VENDOR PROVIDED AND SHALL BE A NEMA 3R RATED STEEL ENCLOSURE. CONTROL PANEL SHALL HOUSE THE PUMP VFD AND ACCEPT INPUTS FROM LEVEL FLOAT SWITCHES FOR PUMP CONTROL. PROVIDE CONTROL PANEL WITH A HAND–OFF–AUTO SELECTOR SWITCH, PUMP RUNNING PILOT LIGHT, AND AN A/C UNIT FOR COOLING AND VENTILATION. CONTROL PANEL SHALL BE LOCKABLE AND HAVE A MAIN CIRCUIT BREAKER ACCESSIBLE FROM THE OUTSIDE OF THE ENCLOSURE.
8. PROVIDE ONE 1" CONDUIT WITH 2#8, 1#10G AND 4#14 FROM THE PUMP CONTROL PANEL TO THE WELL PUMP/LEVEL FLOAT SWITCHES. PROVIDE ONE 1" CONDUIT WITH MANUFACTURER'S CABLE FROM THE PUMP CONTROL PANEL TO THE WELL PUMP LEVEL TRANSDUCER. REFER TO ELECTRICAL DETAILS FOR MORE INFORMATION.
9. ALL WIRING SHALL BE 600V RATED, STRANDED COPPER WITH XHHW INSULATION CONFORMING TO ASTM B3 AND B8. INSTRUMENTATION CABLES SHALL BE 600V RATED, STRANDED COPPER, TWISTED PAIR, XLPE INSULATED WITH AN OVERALL PVC JACKET, AND SHALL COMPLY WITH UL 1581.

FIRM REGISTRATION F-979

MALCOLM PIRNIE

REVISIONS			
NO.	BY	DATE	REMARKS

DES B. YOUNG
DWN B. YOUNG
CKD J. SOKOL

ASARCO WELL PUMP
EL PASO, TEXAS

ELECTRICAL LEGEND & ONE–LINE DIAGRAM

SCALE: NONE

COPYRIGHT © 2015 MALCOLM PIRNIE, INC.

DATE MARCH 2015

E SHEET 1 OF 3

CAD REF. NO.

Date\Time : Thu, 02 Apr 2015 - 2:00pm
Path\Name : H:\PROJECTS\EL PASO WELL\ASOCFL~1.dwg
Acad Version : R18.1s (LMS Tech)
User Name : Young
User Home : Young Spec\PIRNIE STANDARD Files\PROJECTS\EL PASO WELL\ASOCFL~1.DWG Scale:1 Date:04/02/2015 Time:11:58 xopen,0,1
XREFS: \\MOT\LSM.dwg IMAGES.None

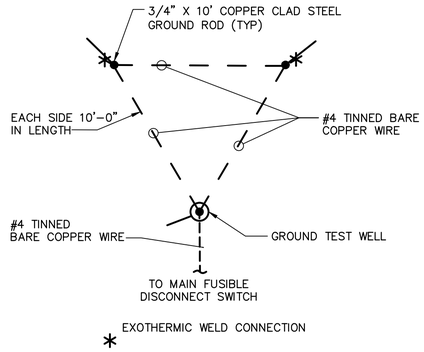

GROUND GRID DETAIL

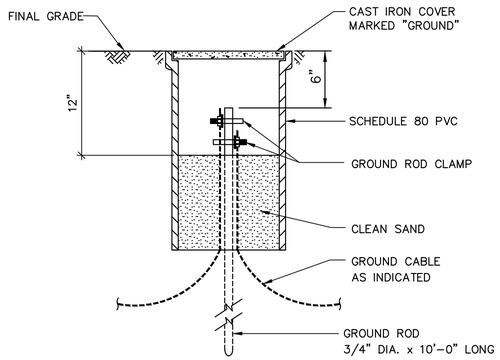

GROUND TEST WELL DETAIL

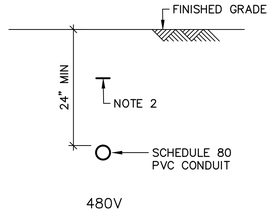

UTILITY TO ELECTRICAL RACK UNDERGROUND DUCT BANK DETAIL

NOTES:

1. CONDUIT ROUTED FROM THE UTILITY SERVICE POLE TO THE ELECTRICAL RACK SHALL BE DIRECT BURIED. PROVIDE SCHEDULE 80 PVC CONDUIT FOR ENTIRE LENGTH OF CONDUIT RUN.
2. PROVIDE DETECTABLE UNDERGROUND WARNING TAPE 12" BELOW GRADE ALONG CENTER OF CONDUIT. WARNING TAPE SHALL BE YELLOW OR RED, 2" WIDE POLYETHYLENE MATERIAL, WITH PERMANENTLY IMPRINTED "CAUTION – BURIED ELECTRIC LINE" REPEATED CONTINUOUSLY OVER THE FULL LENGTH OF THE TAPE. MANUFACTURED BY BRADY, OR EQUAL.

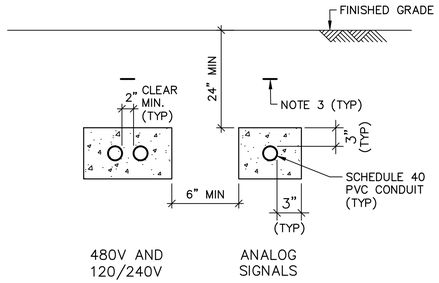

WELL PUMP UNDERGROUND DUCT BANK DETAIL

NOTES:

1. MAINTAIN 12" SEPARATION BETWEEN ANALOG SIGNAL CONDUIT RUNS AND ALL OTHER CONDUIT RUNS THROUGHOUT DUCT BANK.
2. ENTIRE CONCRETE ENCASEMENT SHALL BE COLORED RED.
3. PROVIDE DETECTABLE UNDERGROUND WARNING TAPE 12" BELOW GRADE ALONG CENTER OF DUCT BANK. WARNING TAPE SHALL BE YELLOW OR RED, 2" WIDE POLYETHYLENE MATERIAL, WITH PERMANENTLY IMPRINTED "CAUTION – BURIED ELECTRIC LINE" REPEATED CONTINUOUSLY OVER THE FULL LENGTH OF THE TAPE. MANUFACTURED BY BRADY, OR EQUAL.

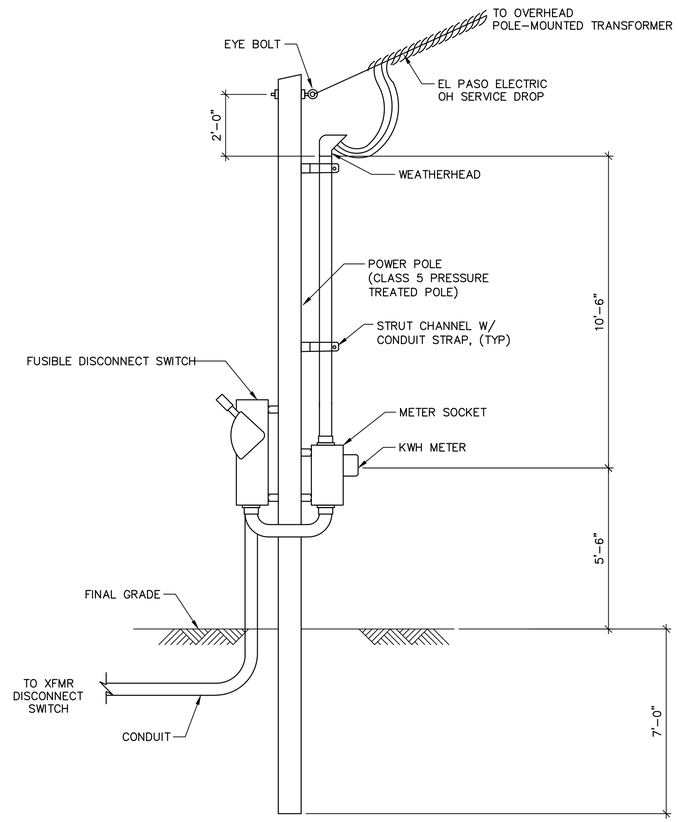

METER POLE DETAIL

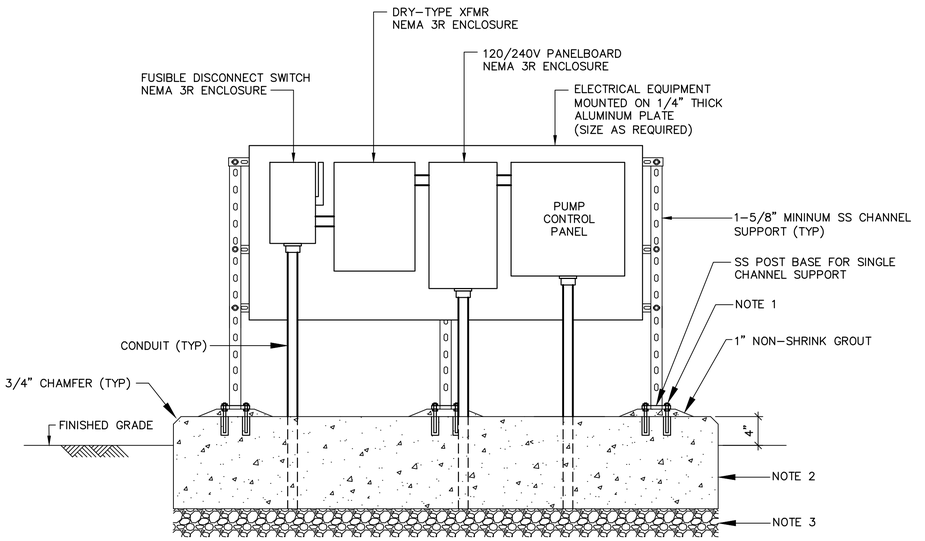

ELECTRICAL RACK ELEVATION

NOTES:

1. 5/8" DIAMETER SS CONCRETE ADHESIVE ANCHOR BOLTS WITH 5" MINIMUM EMBEDMENT (4 PER SUPPORT). LENGTH AS REQUIRED.
2. CONCRETE FOOTER SHALL BE 3000 PSI CONCRETE MIX, TYPE II PORTLAND CEMENT, WITH ENTRAINED AIR. FOOTER SHALL HAVE A MINIMUM THICKNESS OF 30" AND A MINIMUM WIDTH OF 30".
3. 6" COMPACTED SUBBASE, TXDOT ITEM 247, TYPE A, GRADE 1 OR 2.

FIRM REGISTRATION F-979

MALCOLM PIRNIE

REVISIONS			
NO.	BY	DATE	REMARKS

DES B. YOUNG
DWN B. YOUNG
CKD J. SOKOL

ASARCO WELL PUMP
EL PASO, TEXAS

ELECTRICAL DETAILS

SCALE: NONE

COPYRIGHT © 2015
MALCOLM PIRNIE, INC.

DATE MARCH 2015

E SHEET 2 OF 3

CAD REF. NO.

Acad Version : 2014.1x (LMS Tech)
User Name : Young
Date\Time : Wed, 01 Apr 2015 - 4:41pm
Path\Name : H:\PROJECTS\EL PASO WELLOADS\E-2.dwg
User Name:Young Spec:PIRNIE STANDARD Plot:\PROJECTS\EL PASO WELLOADS\E-2.DWG Scale:1:1 Date:03/26/2015 Time:3:54 Layout:E-2
XREFS: \\MP\\LSW.dwg IMAGES:None

NOTES:

1. UTILITY SERVICE POWER POLE LOCATED SOUTH OF PARKING LOT. REFER TO ONE-LINE DIAGRAM FOR REQUIREMENTS.
2. CONDUIT ROUTED FROM THE UTILITY POWER POLE TO THE ELECTRICAL RACK IS TO BE DIRECT BURIED AND ROUTED ADJACENT TO THE ROAD. PROVIDE SCHEDULE 80 PVC CONDUIT FOR THIS CONDUIT RUN. REFER TO ONE-LINE DIAGRAM FOR CONDUIT CONTENTS AND ELECTRICAL DETAILS FOR DUCT BANK CROSS SECTION DETAIL.
3. PROVIDE ELECTRICAL PULL BOX FLUSH WITH GRADE. PULL BOX SHALL BE MADE OF POLYMER CONCRETE AND HAVE ASHTO H-20 TRAFFIC RATING. SIZE AS REQUIRED BY THE NEC.
4. PROVIDE CONCRETE ENCASEMENT FOR THIS DUCT BANK. REFER TO ONE-LINE DIAGRAM FOR CONDUIT CONTENTS AND ELECTRICAL DETAILS FOR DUCT BANK CROSS SECTION DETAIL.
5. REFER TO ELECTRICAL RACK DETAIL FOR MORE INFORMATION.

N

0 50' 100'

FIRM REGISTRATION F-979

MALCOLM PIRNIE

REVISIONS			
NO.	BY	DATE	REMARKS

DES B. YOUNG
DWN B. YOUNG
CKD J. SOKOL

ASARCO WELL PUMP
EL PASO, TEXAS

ELECTRICAL SITE PLAN

SCALE: 1" = 50'

COPYRIGHT © 2014
MALCOLM PIRNIE, INC.

DATE MARCH 2015

E SHEET 3 OF 3

CAD REF. NO.

User: Young Spec:PIRNIE STANDARD File:H:\PROJECTS\EL PASO WELL\CADD\E-3.DWG Scale:1:1 Date:04/01/2015 Time:16:28 Layout:E-3
XREFS: \\arcadis-us.com\OfficeData\Phoenix-AZ\ENV\ENV\PROJ\1200\1209 - MP - El Paso Smelter\180 - CAD\97-Image Files\Aug2014 Site Aerial from Google.dwg H:\PROJECTS\EL PASO WELL\XREF\TLBK.dwg IMAGES:None
Acad Version : R18.1s (LMS Tech) Date\Time : Wed, 01 Apr 2015 - 4:49pm
User Name : Young Path\Name : H:\PROJECTS\EL PASO WELL\CADD\E-3.dwg

GHB WELL EP-163 - DRAFT WELLHEAD DESIGN PROFILE VIEW

NOT TO SCALE

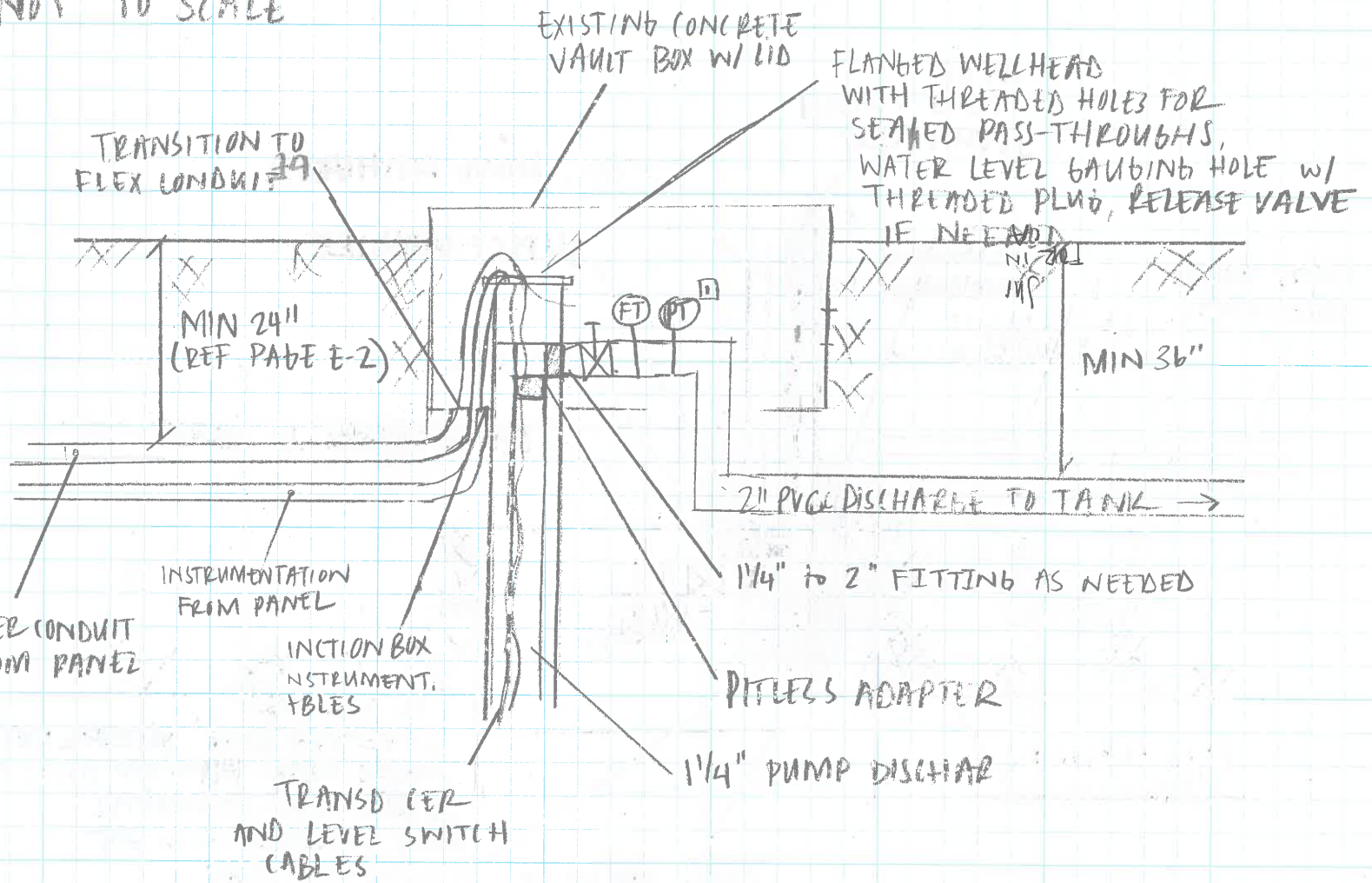

NOTES

1. INSTRUMENTATION WILL BE SUBMERSIBLE WITH REMOTE VIEWING AT PANEL

MALCOLM PIRNIE

SUBJECT: GHB Wellhead Sketch
ABARCO EL PASO

JOB NO:

BY: SZ DATE: 3/25/15

CHKD: DATE:

PAGE 1

SHEET 1

AGM Form 30 12-01

MALCOLM PIRNIE

SUBJECT:	GHB Wellhead sketch ASARCO El Paso
JOB NO:	

BY: SZ DATE: 3/25/15	
CHKD: DATE:	

PAGE 2

SHEET 1

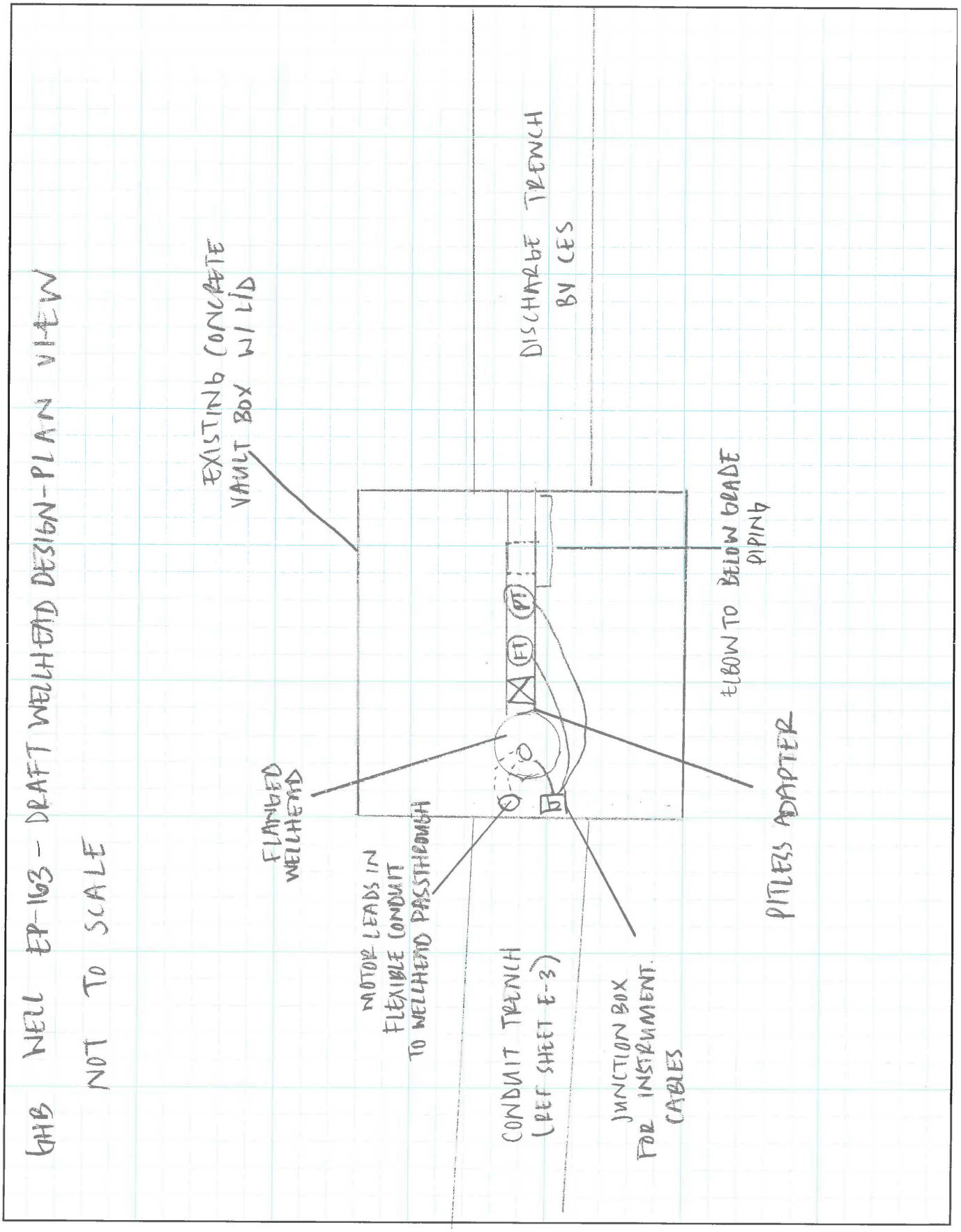

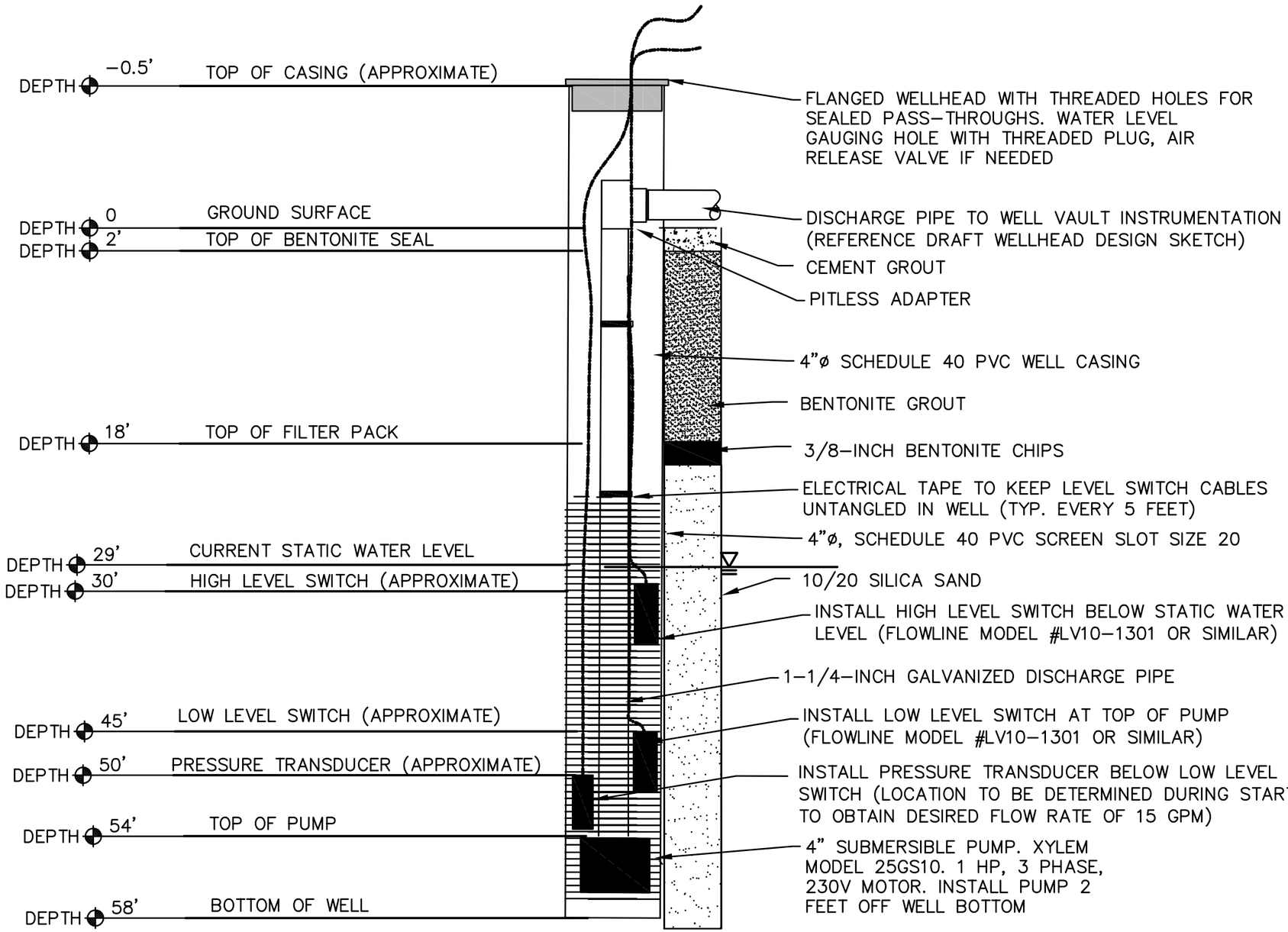

NOT TO SCALE

Path\Name: G:\Common\Gaston Leone\Projects\ASARCO-El Paso\East Property GHB\GHB Design\EP-163 Well Schematic.dwg
Plot Date\Time: 4/3/2015 12:33 PM Current Plotstyle: ACS-Mono-Imperial-CTB.ctb Page Set Up Name: ----
Acad Version: 18.1s (LMS Tech)
User Name: Zabienski, Sonja

Area Manager	
Project Director	
Task Manager	
Technical Review	

2015

MALCOLM PIRNIE

FORMER ASARCO SMELTER SITE
EAST PROPERTY GHB

GHB PUMPING WELL EP-163
WELL CONSTRUCTION AND PUMP INSTALLATION

EL PASO, TEXAS

Project Number	06835001.2014.42GW1
Drawing Date	FEBRUARY 2015
Figure	

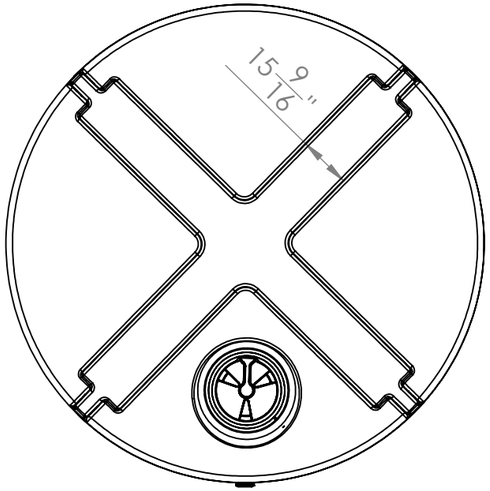

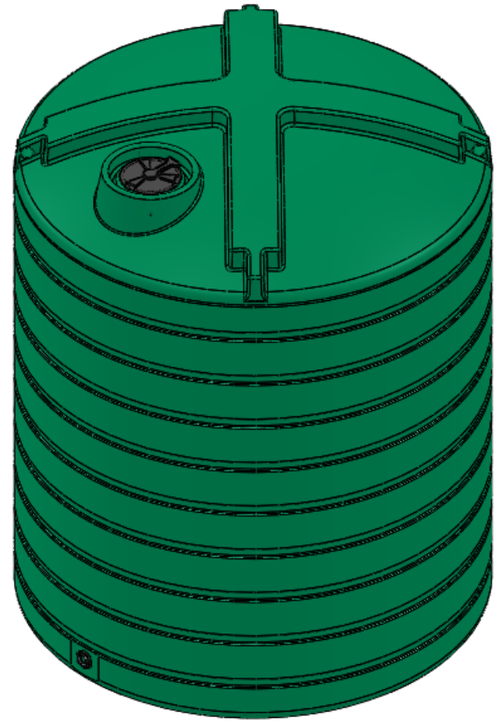

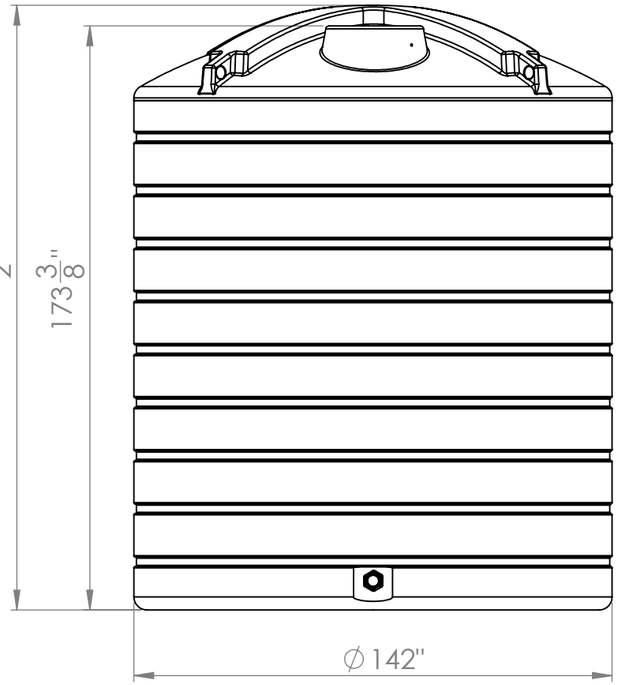

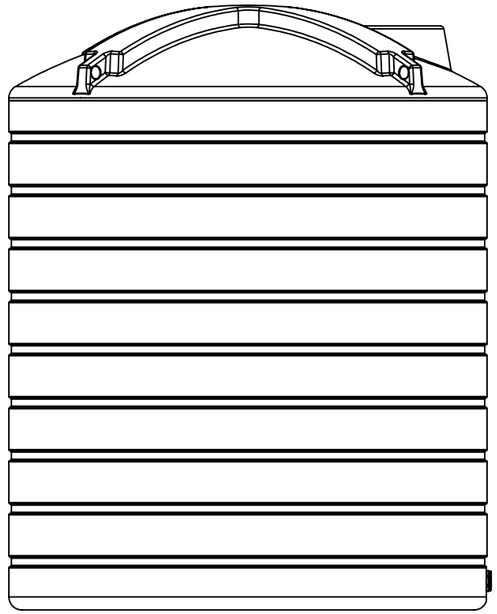

PROPRIETARY AND CONFIDENTIAL

THE INFORMATION CONTAINED IN THIS DRAWING IS THE SOLE PROPERTY OF Agrimaxx, Enduraplas. ANY REPRODUCTION IN PART OR AS A WHOLE WITHOUT THE WRITTEN PERMISSION OF Agrimaxx, Enduraplas, IS PROHIBITED.

NEXT ASSY	USED ON
APPLICATION	

UNLESS OTHERWISE SPECIFIED:

DIMENSIONS ARE IN INCHES
TOLERANCES:
FRACTIONAL ±
ANGULAR: MACH ± BEND ±
TWO PLACE DECIMAL ±
THREE PLACE DECIMAL ±

INTERPRET GEOMETRIC TOLERANCING PER:

MATERIAL

FINISH

DO NOT SCALE DRAWING

	NAME	DATE
DRAWN	DNS	9/6/11
CHECKED		
ENG APPR.		
MFG APPR.		
Q.A.		

COMMENTS:

Enduraplas

TITLE:

EVT 10000 - 144 inch

SIZE	DWG. NO.	REV
B		1

SCALE: 1:100 WEIGHT: SHEET 1 OF 1

NOTES:
1. INSTALL AIR VENT PER AIR VENT DETAIL ON SHEET C-2.
2. ALIGNMENT OF HDPE PIPING APPROXIMATE. FIELD ROUTE PIPING AS REQUIRED.
3. FOR PUMP DISCHRAGE VALVES AND INSTRUMENTATION SEE PROCESS FLOW ON SHEET C-2.

FIRM REGISTRATION F-979

MALCOLM PIRNIE

REVISIONS			
NO.	BY	DATE	REMARKS

DES AUS
DWN
CKD

ASARCO WELL PUMP
EL PASO, TEXAS

GHB PIPELINE

SCALE: AS NOTED

COPYRIGHT © 2015
MALCOLM PIRNIE, INC.

DATE MARCH 2015

C SHEET 1 OF 2

CAD REF. NO.

Date\Time : Thu, 02 Apr 2015 - 4:15pm
Path\Name : C:\GW\PROJ\1200\1229 - WP - El Paso Smelter\180 - GW\03-Exhibit_01\GB.dwg
Acad Version : R18.1s (LMS Tech)
User Name : kopp

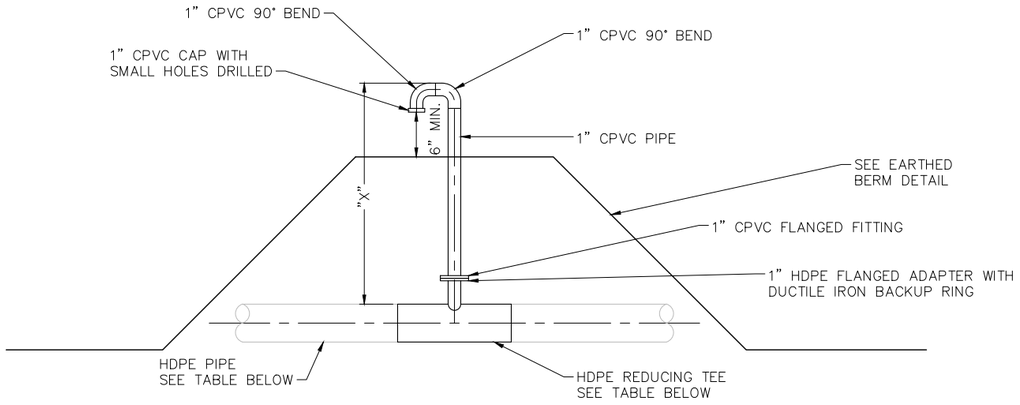

STATION	HDPE PIPE SIZE	TEE SIZE	HEIGHT ("X")	DESCRIP.
STA. 7+45.75	3" SDR 17	3"x3"x1"	4.0 FT	HIGH POINT
STA. 13+96.09	4" SDR 11	4"x4"x2"	2.0 FT	HIGH POINT
STA. 22+54.34	4" SDR 11	4"x4"x2"	2.0 FT	HIGH POINT
STA. 30+22.75	4" SDR 11	4"x4"x2"	2.0 FT	INCR. IN SLOPE
STA. 37+28.64	4" SDR 11	4"x4"x2"	2.0 FT	INCR. IN SLOPE

NOTE: THE LOCATION OF VENTS ARE APPROXIMATE. VENTS SHALL BE INSTALLED AT CORRESPONDING DESCRIPTION ON PIPELINE.

VENT DETAIL

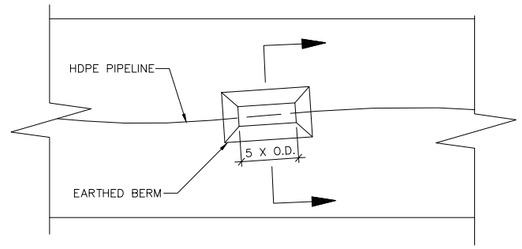

EARTHED BERM. PROVIDE COHESIVE MATERIAL FREE OF ROCKS LARGER THAN ONE-INCH AND SHARP OBJECTS

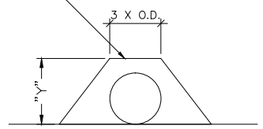

STATION	HEIGHT ("Y")
STA. 7+45.75	3.0 FT
STA. 13+96.09	1.5 FT
STA. 22+54.34	1.5 FT
STA. 30+22.75	1.5 FT
STA. 37+28.64	1.5 FT

EARTHED BERM DETAIL

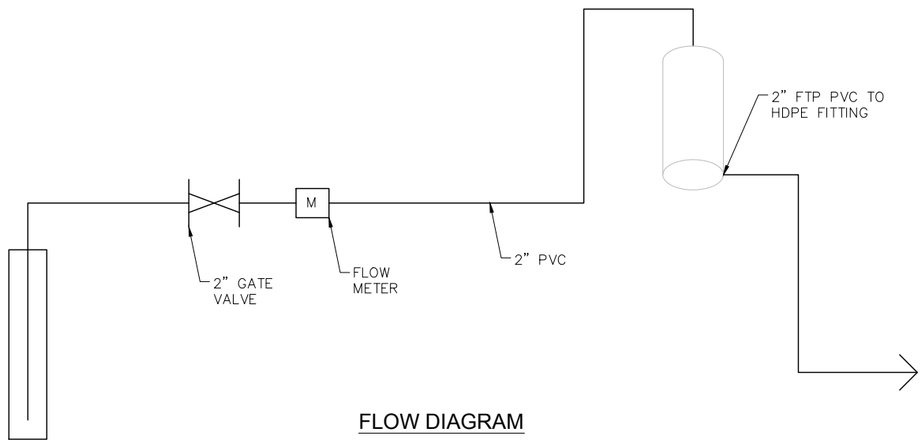

FLOW DIAGRAM

Date\Time : Thu, 02 Apr 2015 - 4:04pm
Path\Name : C:\JAX\PROJ\1200\1229 - MP - El Paso Smelter\180 - CAD\03-Exhibits_C\GN.dwg
Acad Version : R18.1s (LMS Tech)
User Name : tapp

FIRM REGISTRATION F-979

MALCOLM PIRNIE

REVISIONS			
NO.	BY	DATE	REMARKS

DES LH
DWN RJK
CKD LH

PARKER BROTHERS ARROYO
FORMER ASARCO SMELTER
EL PASO, TEXAS

CIVIL DETAILS AND FLOW DIAGRAM

SCALE: NONE

COPYRIGHT © 2015
MALCOLM PIRNIE, INC.

DATE MARCH 2015

C SHEET 2 OF 2

CAD REF. NO. GN